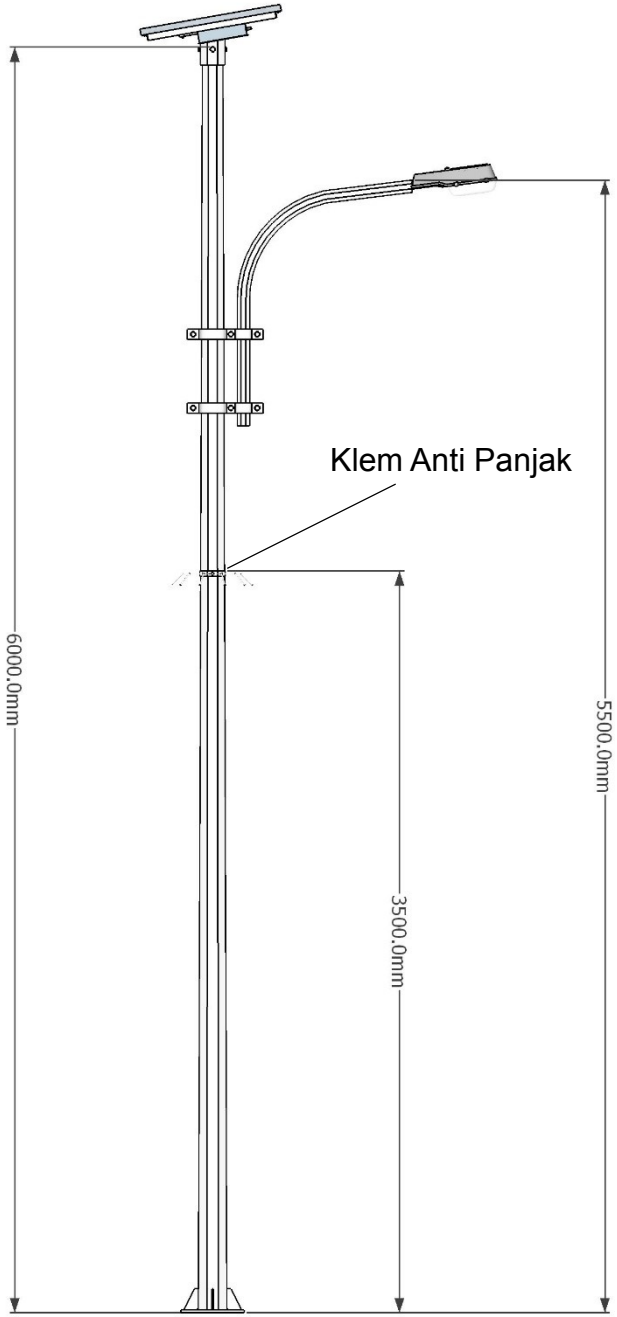

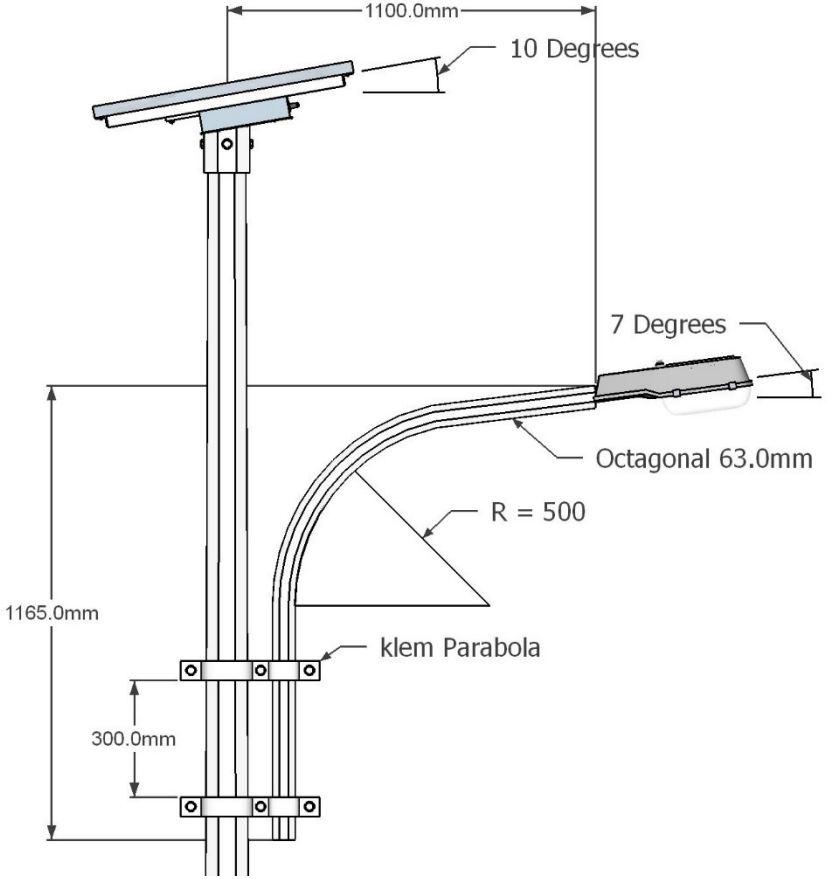

SuryaTek
Puri Safira Regency, De Armilla D8.14 Jl. Raya Karang Turi Menganti Gresik 61174 East Java - IND
P : +62 31 51161496
M : +62 8564 5279818
E : mkt.suryatek@gmail.com
W : www.surya-tek.net

Base Plate	:300 x 300 x 14mm
Plate Baja	:ST41 SS400
Welding	:Las Listrik
Finishing	:Hot Dipped Galvanized
Pole Height	:6000 mm
Bottom of Pole	:Ø 134mm
Top of Pole	:Ø 96mm
Anchor Bolt	:Ø 16mm
Drawing # 01 General Info Pole	
Proyek: Hot Dipped Galvanized 6M Pole	

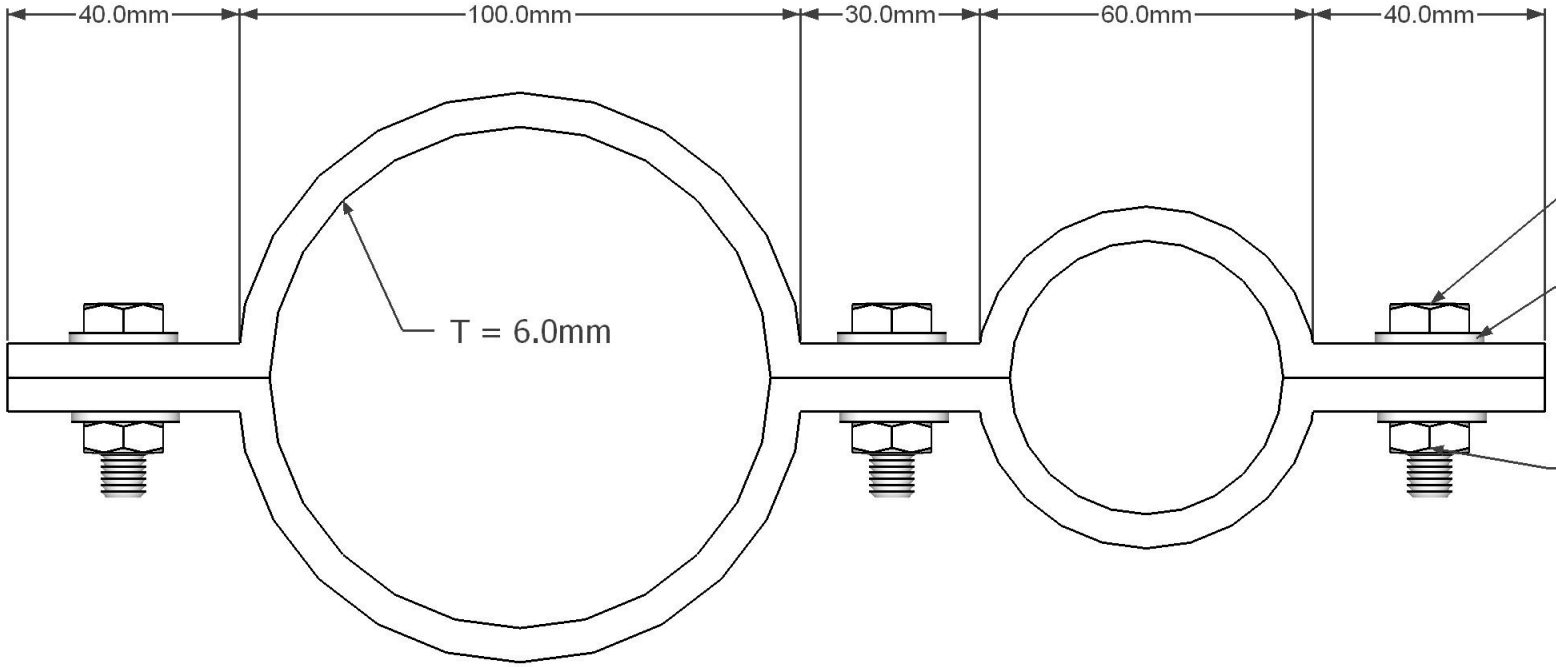

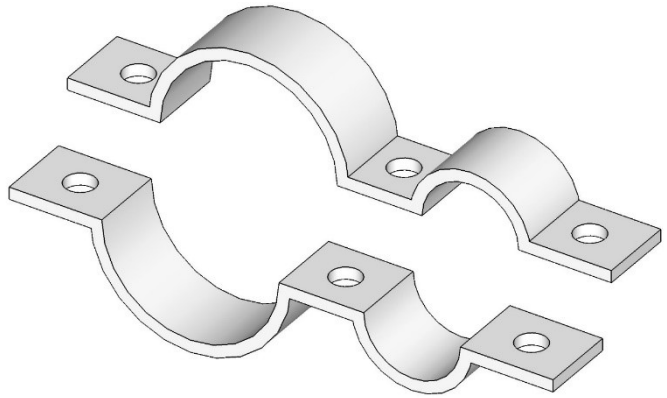

SuryaTek
Puri Safira Regency, De Armilla D8.14 Jl. Raya
Karang Turi Menganti Gresik 61174 East Java - IND
P : +62 31 51161496
M : +62 8564 5279818
E : mkt.suryatek@gmail.com
W : www.surya-tek.net

Drawing # 02 Detail Klem Parabola 2 Biji

Proyek: Hot Dipped Galvanized 6M Pole

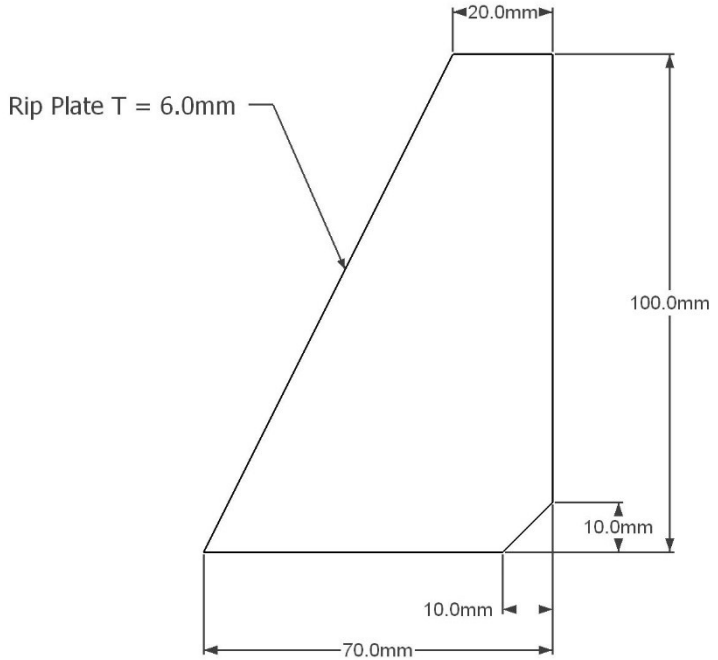

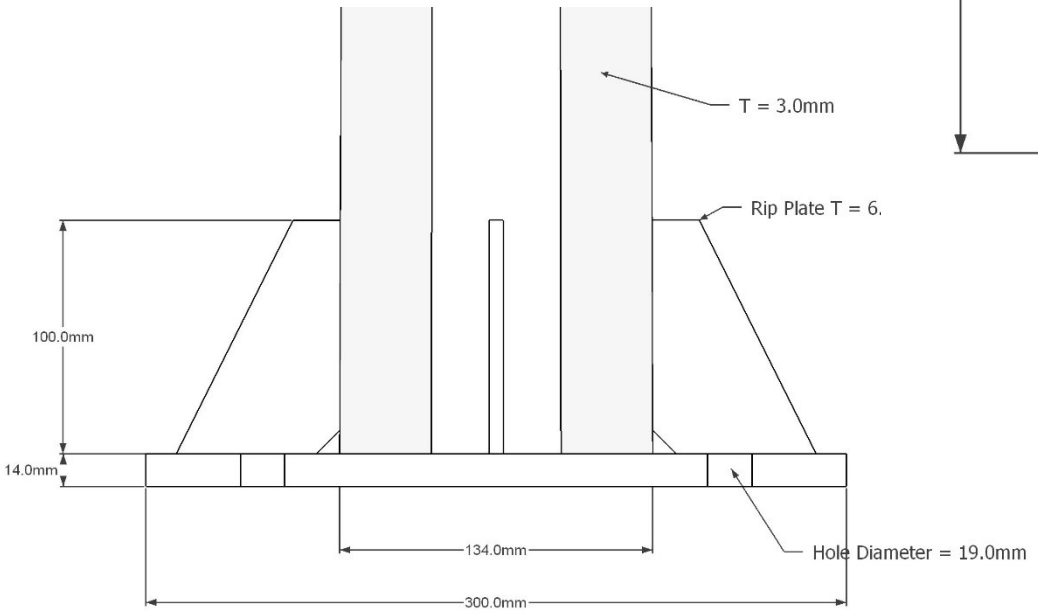

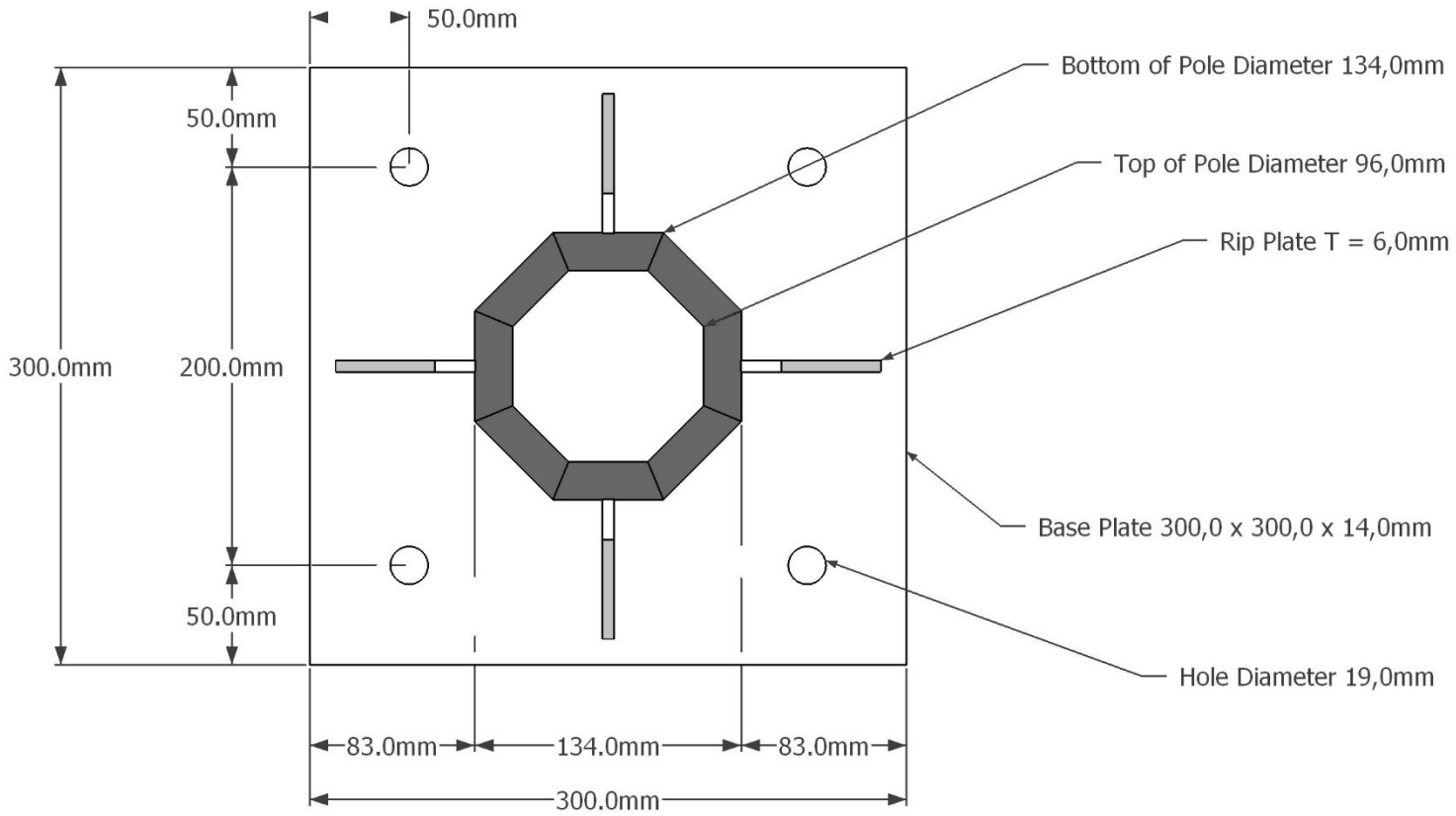

SuryaTek
Puri Safira Regency, De Armilla D8.14 Jl. Raya Karang Turi Menganti Gresik 61174 East Java - IND
P : +62 31 51161496
M : +62 8564 5279818
E : mkt.suryatek@gmail.com
W : www.surya-tek.net

Drawing # 03 Details Base Plate

Proyek: Hot Dipped Galvanized 6M Pole

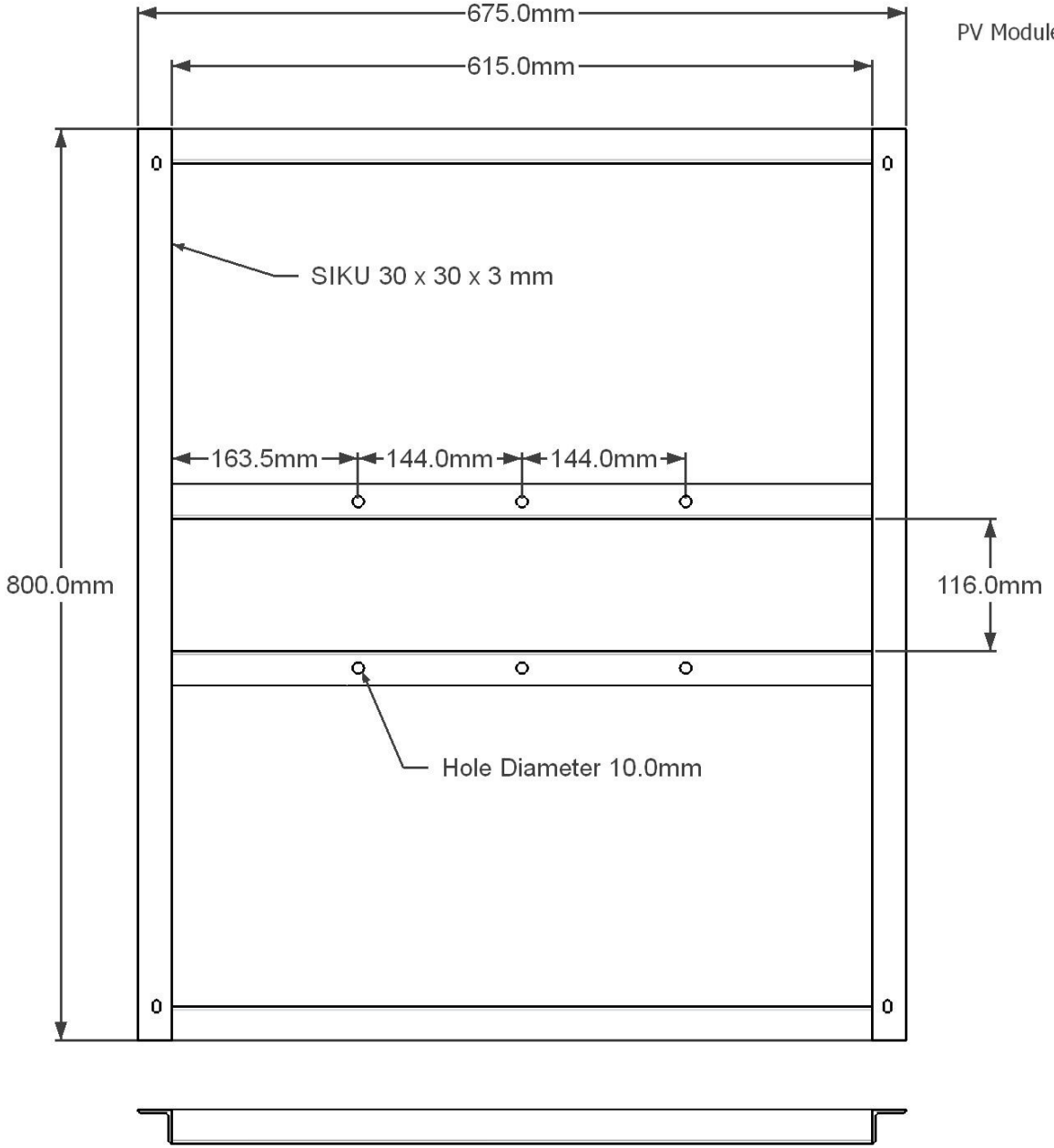

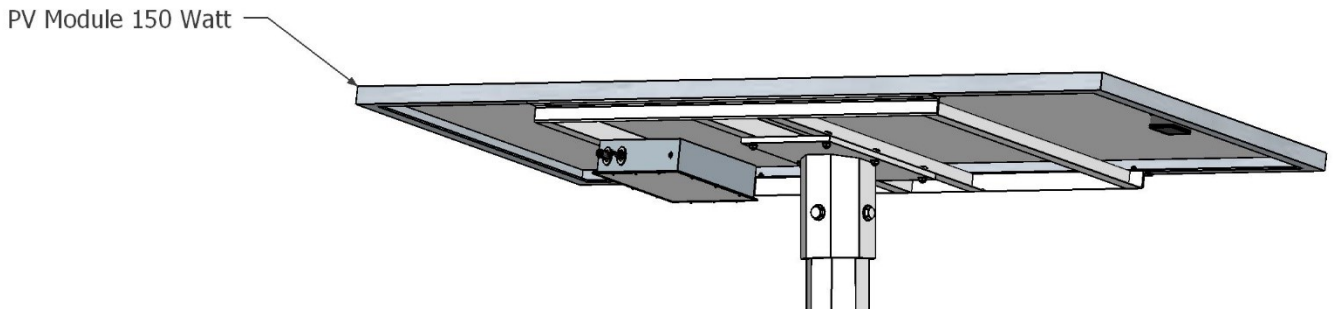

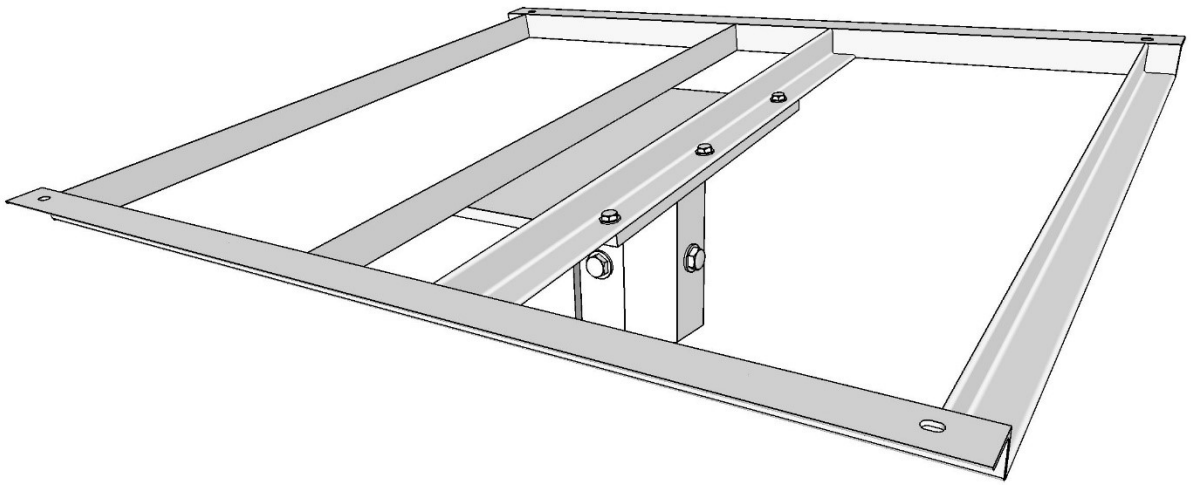

SuryaTek
Puri Safira Regency, De Armilla D8.14 Jl. Raya Karang Turi Menganti Gresik 61174 East Java - IND
P : +62 31 51161496
M : +62 8564 5279818
E : mkt.suryatek@gmail.com
W : www.surya-tek.net

Drawing # 04 Details 01 Support PV Module

Proyek: Hot Dipped Galvanized 6M Pole

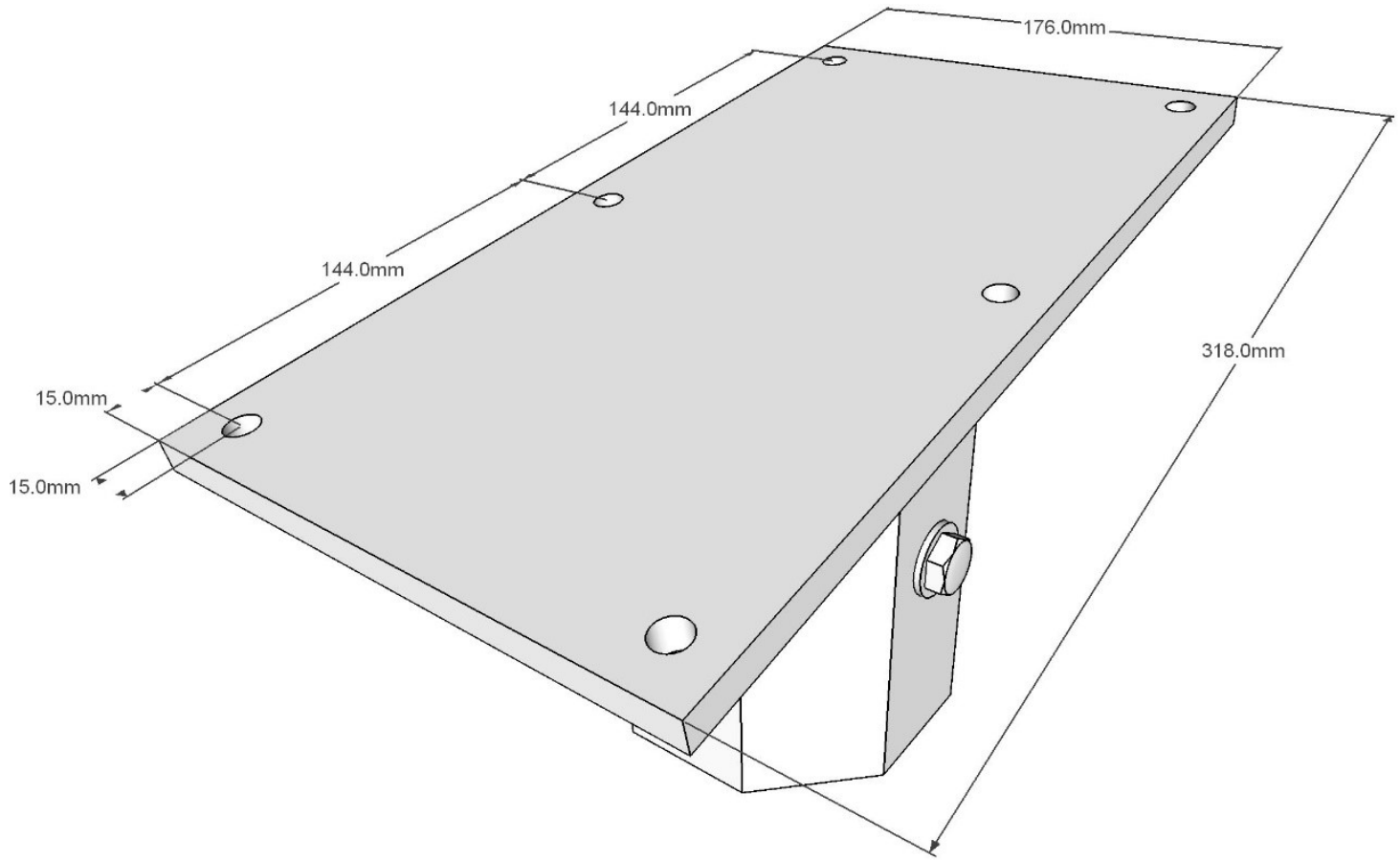

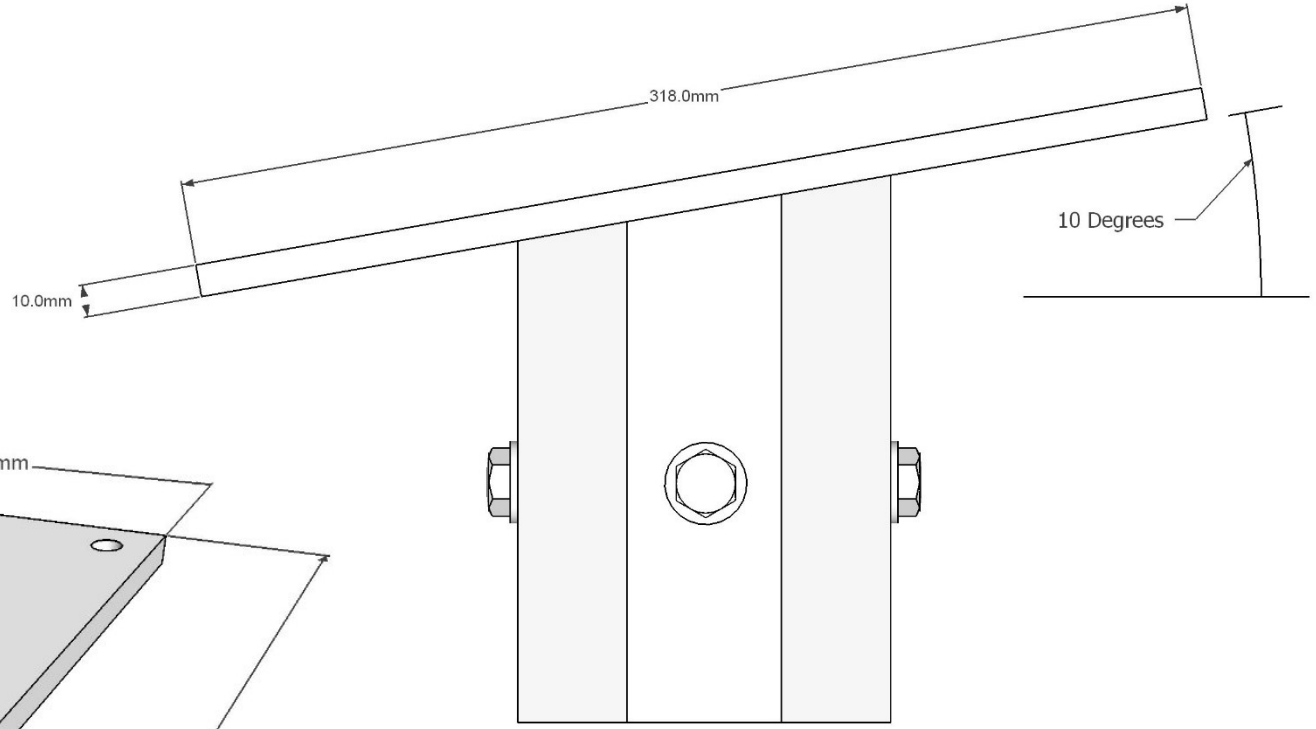

SuryaTek

Puri Safira Regency, De Armilla D8.14 Jl. Raya Karang Turi Menganti Gresik 61174 East Java - IND
P : +62 31 51161496
M : +62 8564 5279818
E : mkt.suryatek@gmail.com
W : www.surya-tek.net

Drawing # 05 Detail 02 Support PV Module

Proyek: Hot Dipped Galvanized 6M Pole

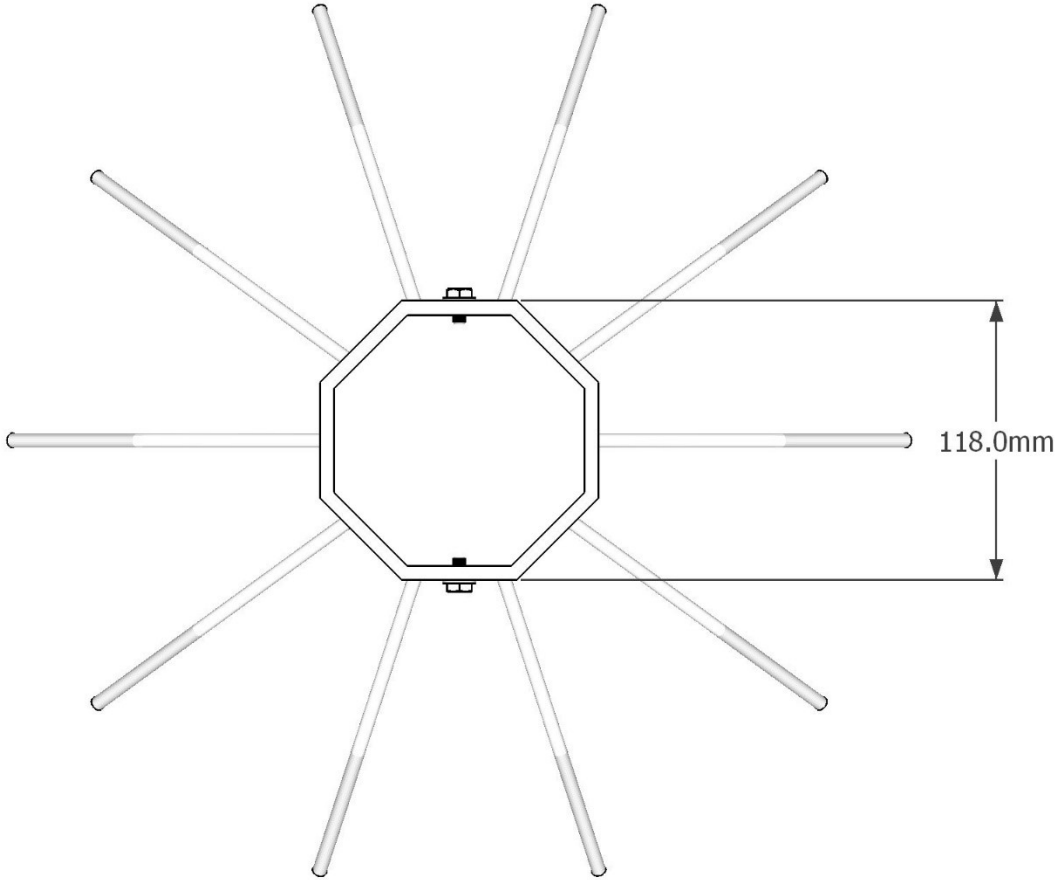

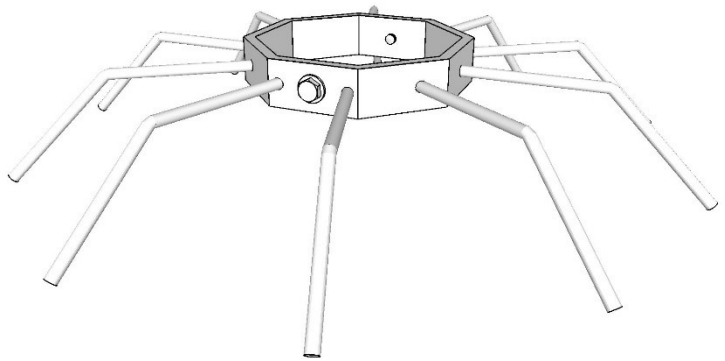

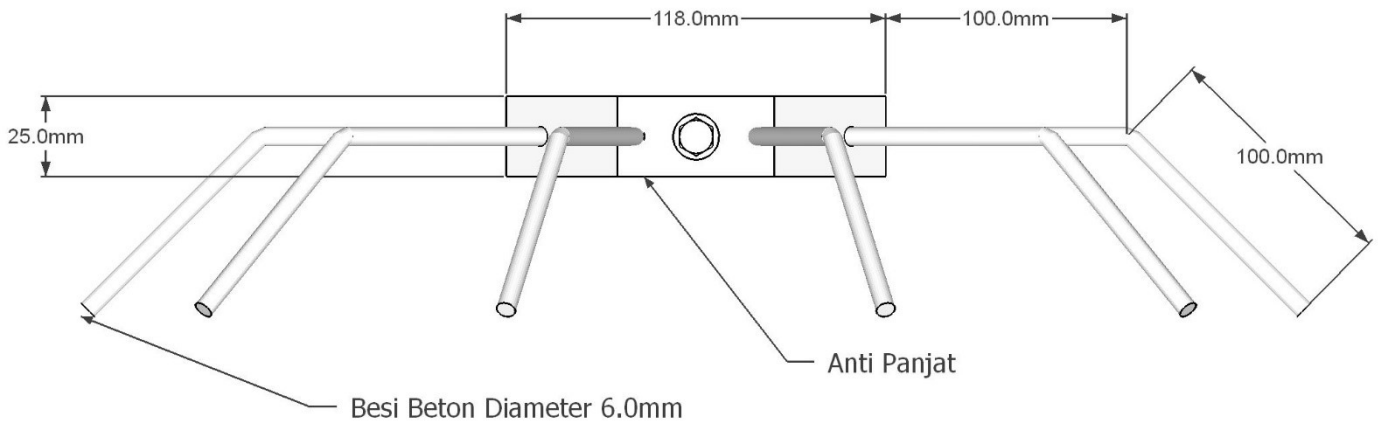

SuryaTek
Puri Safira Regency, De Armilla D8.14 Jl. Raya Karang Turi Menganti Gresik 61174 East Java - IND
P : +62 31 51161496
M : +62 8564 5279818
E : mkt.suryatek@gmail.com
W : www.surya-tek.net

Drawing # 06 Detail Anti Panjat

Proyek: Hot Dipped Galvanized 6M Pole

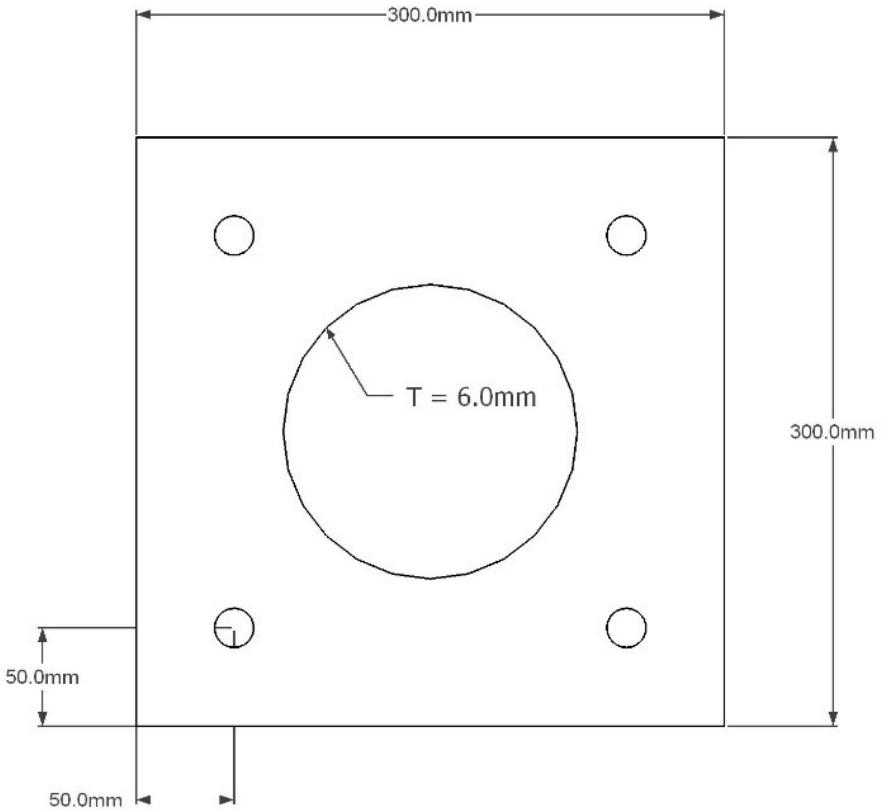

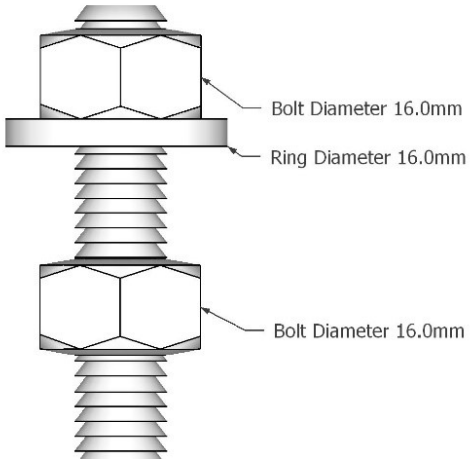

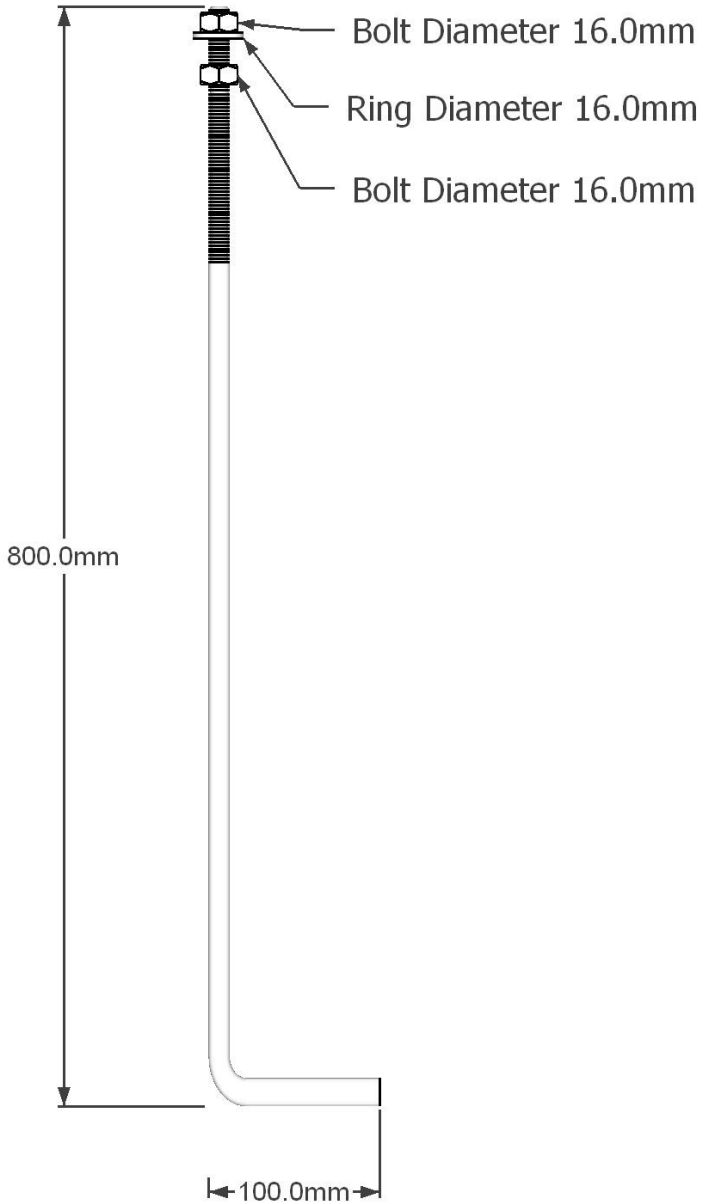

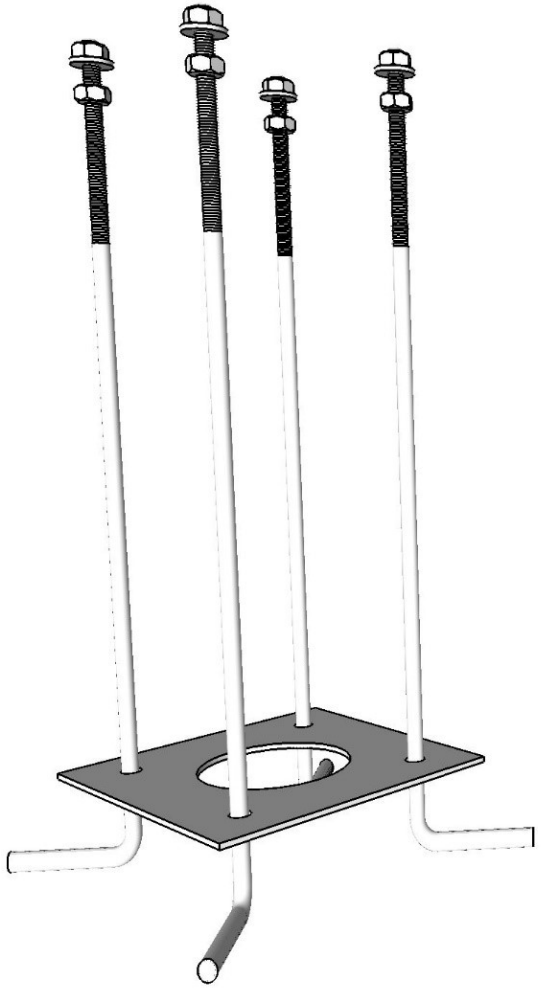

SuryaTek
Puri Safira Regency, De Armilla D8.14 Jl. Raya Karang Turi Menganti Gresik 61174 East Java - IND
P : +62 31 51161496
M : +62 8564 5279818
E : mkt.suryatek@gmail.com
W : www.surya-tek.net

Drawing # 07 Angkur Pondasi Beton

Proyek: Hot Dipped Galvanized 6M Pole